Part. S0540

Adjustable bracket

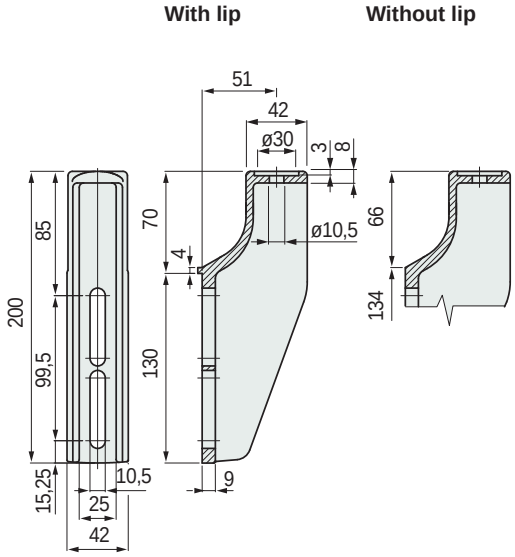

Version	Code	Weight kg
With lip	683551	0,15
Without lip	**683541**	

- Material: reinforced polyamide PA FV (black).
- Packaging: 50 pieces.
- Accessories: spacer Part. S0725.

• **Pin dimensions** for Part. S0540

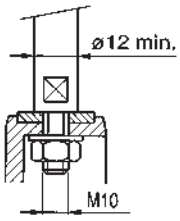

• **Assembly** of Part. S0540

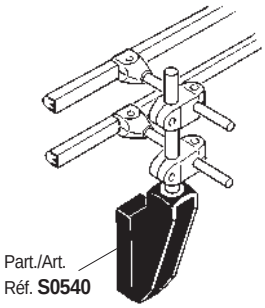

• **Accessories**
Spacer Part. S0545
Applicable to
Part. S0540

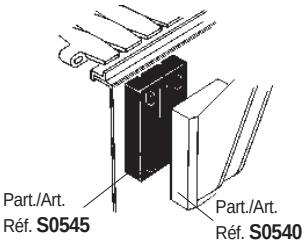

• **Assembly of drip tray support**
Part. S0226 - S0336.
Part. S0540
permit application of drip tray support.

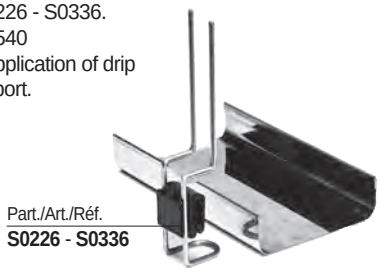

• **Assembly** with swivel head Part. S0255

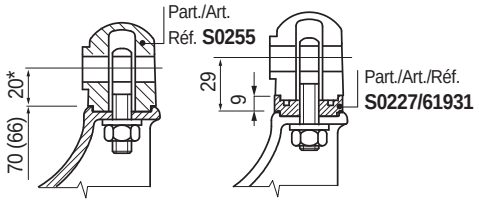

* = To increase the height (by 9 mm) use 1 spacer Part. S0227 code 61931. The length of the thread allows for only 1 spacer.

• **Assembly** with swivel head Part. S0359

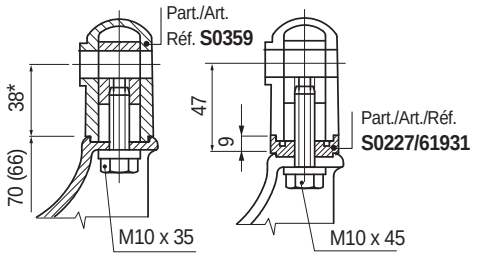

* = To increase the height (by 9 mm) use 1 or more spacer Part. S0227 code 61931.
To use the spacer it is necessary a longer screw.

• **Assembly** with swivel head Part. S0256

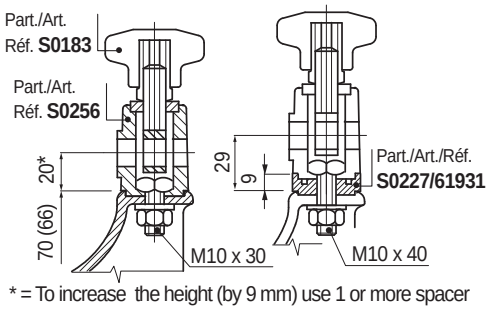

* = To increase the height (by 9 mm) use 1 or more spacer Part. S0227 code 61931.
To use the spacer it is necessary a longer screw.

• **Assembly** with swivel head Part. S0192

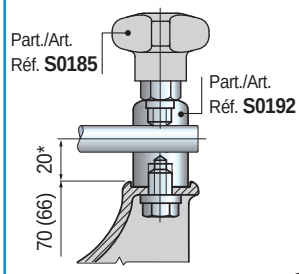

H mm	Head code Part. S0192
20	53091-60933 see page S145
37 57 87 127	See heads Page S153

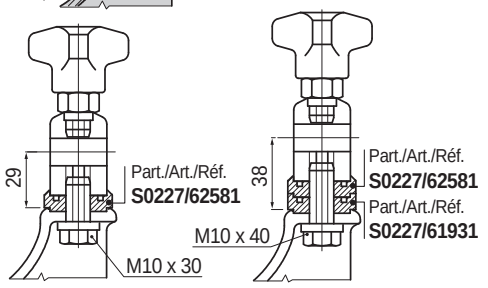

To use the spacer Part. S0227, it is necessary a longer screw.

● **Best Seller**
● **Standard**
● **On request:** minimum quantity may apply. Consult our Customer Service for availability.

Item code for order = Part. + Code