Magnetflex Combi-A Version CB6

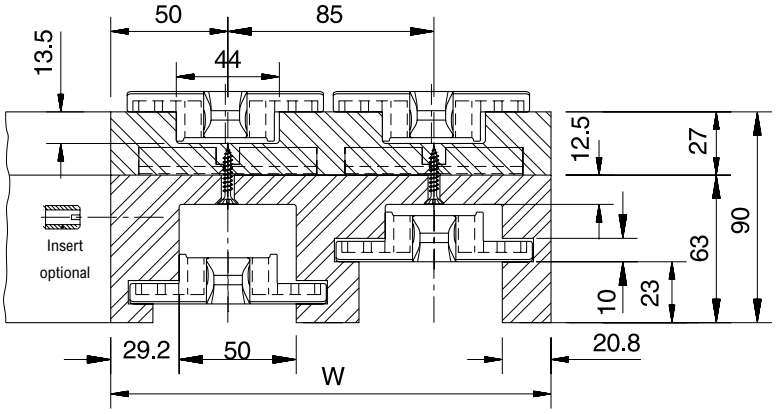

Number of Tracks	1	2	3	4	5	6
Width W	100 mm	185 mm	270 mm	355 mm	440 mm	525 mm
Version CB6						
15°	604.14.16	604.14.17	604.14.18	604.14.19	604.14.20	604.14.21
30°	604.14.31	604.14.32	604.14.33	604.14.34	604.14.35	604.14.36
45°	604.14.46	604.14.47	604.14.48	604.14.49	604.14.50	604.14.51
60°	604.14.61	604.14.62	604.14.63	604.14.64	604.14.65	604.14.66
75°	604.14.76	604.14.77	604.14.78	604.14.79	604.14.80	604.14.81
90°	604.14.01	604.14.02	604.14.03	604.14.04	604.14.05	604.14.06

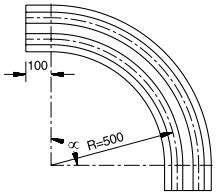

Radius

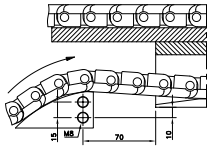

Return guide shoe

More than 6 tracks on request.
• For plastic chains: FGM 1050, FTM 1060.

Magnetflex Combi-X Version CXB6

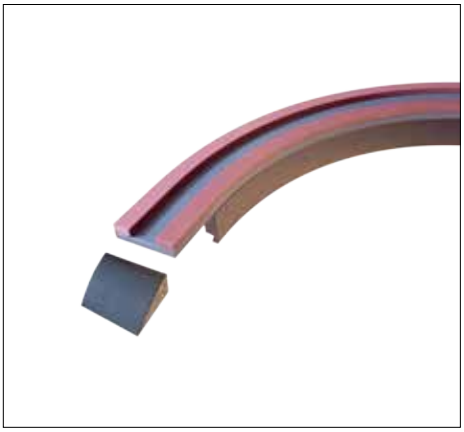

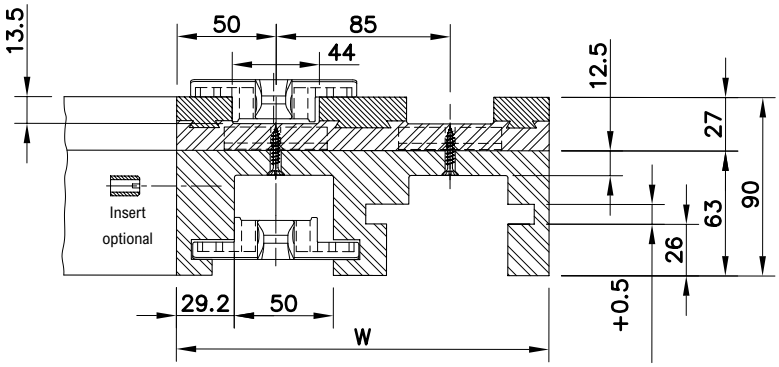

Number of Tracks	1	2	3	4	5	6
Width W	100 mm	185 mm	270 mm	355 mm	440 mm	525 mm
Version CXB6						
15°	604.41.16	604.41.17	604.41.18	604.41.19	604.41.20	604.41.21
30°	604.41.31	604.41.32	604.41.33	604.41.34	604.41.35	604.41.36
45°	604.41.46	604.41.47	604.41.48	604.41.49	604.41.50	604.41.51
60°	604.41.61	604.41.62	604.41.63	604.41.64	604.41.65	604.41.66
75°	604.41.76	604.41.77	604.41.78	604.41.79	604.41.80	604.41.81
90°	604.41.01	604.41.02	604.41.03	604.41.04	604.41.05	604.41.06

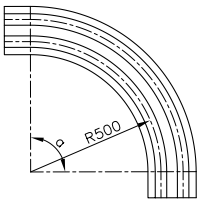

Radius

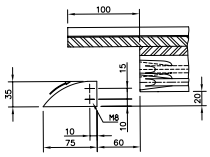

Return guide shoe

More than 6 tracks on request.
• For plastic chains: FGM 1050, FTM 1060.